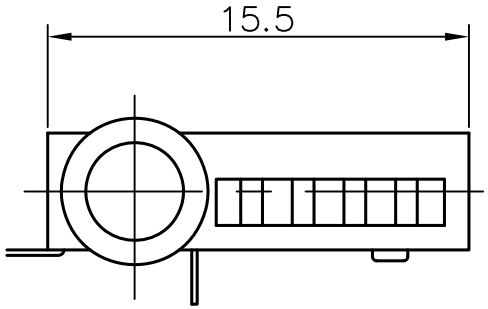

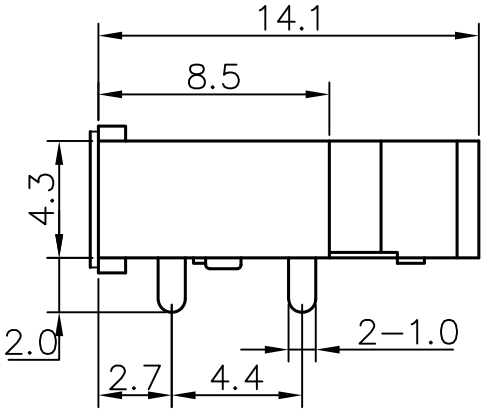

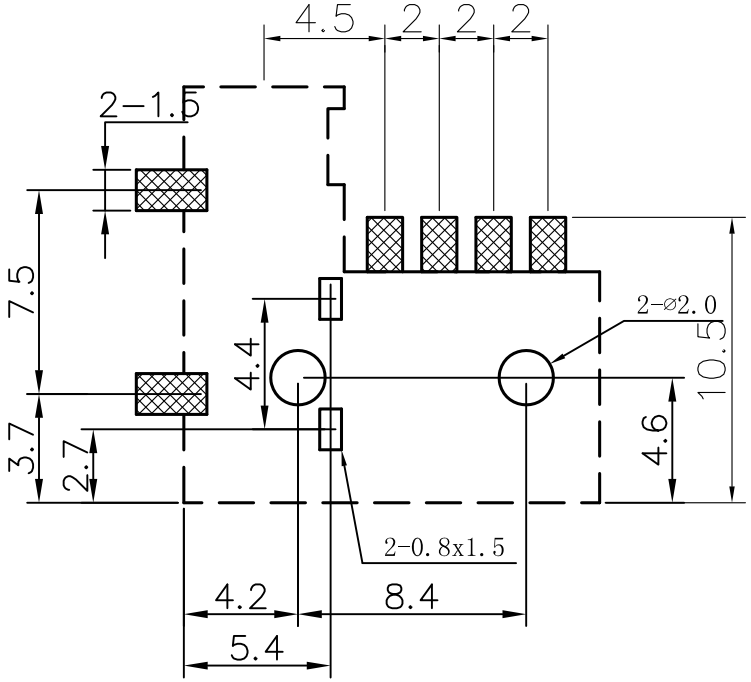

PCB LAYOUT TOP VIEW

TOLERANCES:±0.05

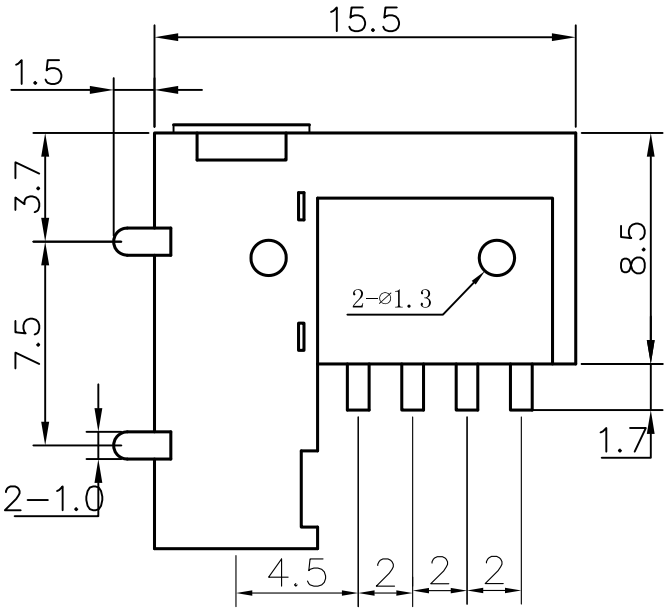

REV.	REVISIONS			
	ECN NO.	LOCATION	DESCRIPTION	DATE
			INITIALRELEASE	

SCALE	N/A	DESIGNER	Peter	9.6.10
REV	A	CHECKED	Mona	9.6.10
SHEET	1/1	APPROVE	Jona	9.6.10

UNLESS OTHKRWISE SPECIFIED DIMENSIONS ARE IN mm

DIMRNSION		TOLERANCE
.XX	±	0.20
.X	±	0.30
X.	±	0.50
ANGULAR	±	5°
UNIT	mm	

深圳市伊川電子有限公司

SHENZHEN YICUAN ELECTRONICS CO.,LTD

TITLE:	Ø3.5mm PHONE JACK
PART NO.	PJ3520S
DWG. NO.	